andis®

MODEL PMT2 TRIMMER 120 VOLT

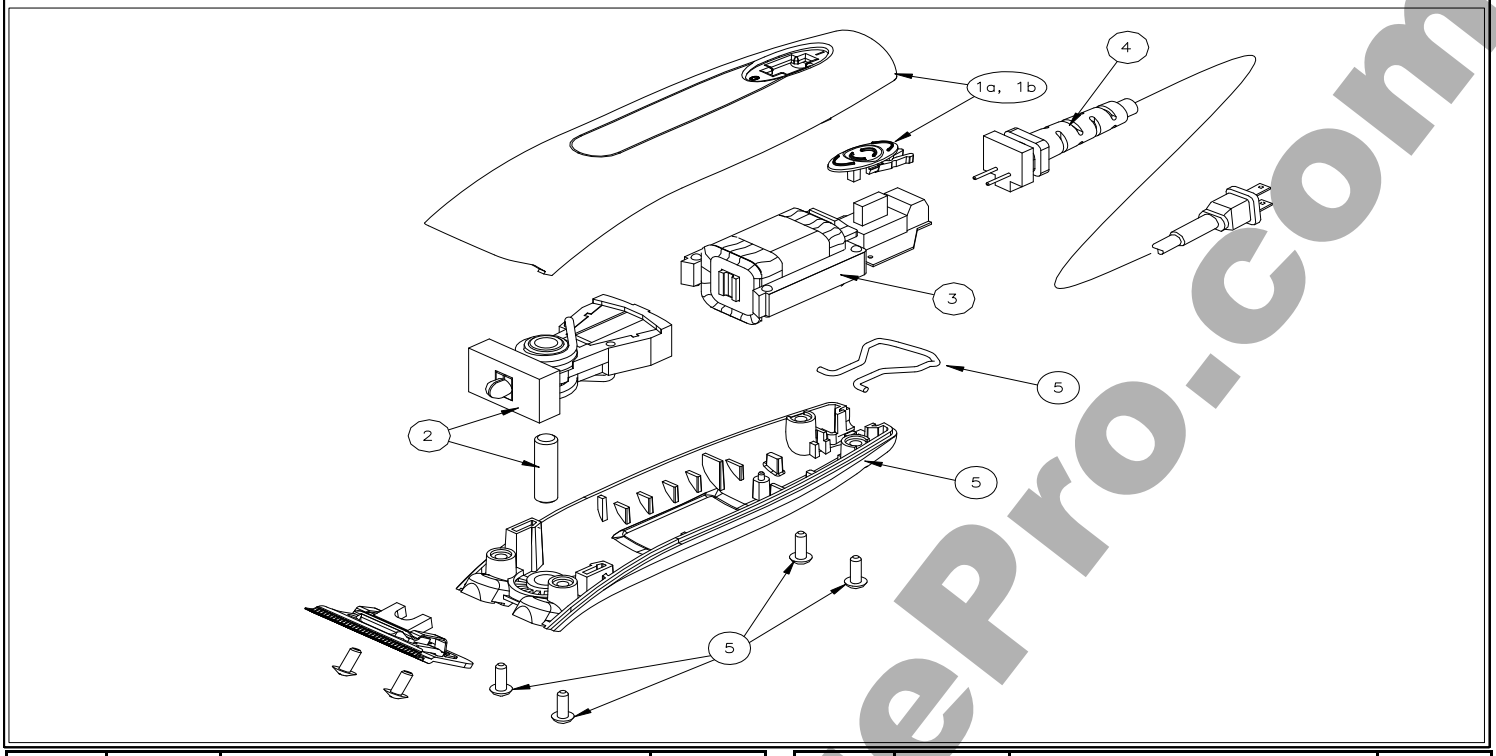

ITEM NO.	PART NO.	DESCRIPTION	QTY. REQ'D
1		Upper Housing Assy (Includes housing and switch actuator)	
1a	69051	With Black Housing	1
1b	69049	With Black Chrome Housing (experience)	1
2	69037	Pivot Assembly (Includes Pivot Assembly and Pin)	1
3	73017	PCB/Field Assembly	1
4	73013	Cord Assembly	1
5	69052	Lower Housing Assy (Includes Lower Housing, Screws, and Hanger Hook)	1

ITEM NO.	PART NO.	DESCRIPTION	QTY. REQ'D

IMPORTANT INFORMATION

When ordering repair parts, include part number, part name and model of trimmer. For best performance, trimmer blades should be CLEANED and OILED with Andis Clipper Oil before and after use, If repair is necessary, return to any Andis Authorized Repair Service Station, or to Andis Company, 1800 Renaissance Blvd., Sturtevant, Wisconsin, 53177 U.S.A.. Pack carefully, mail either Insured Parcel Post, or U.P.S. , attach a letter to outside of package explaining difficulty.

Rev-A 6/29/10

www.TheEdgePro.com