andis®

MODEL SLII CLIPPER 120 VOLT

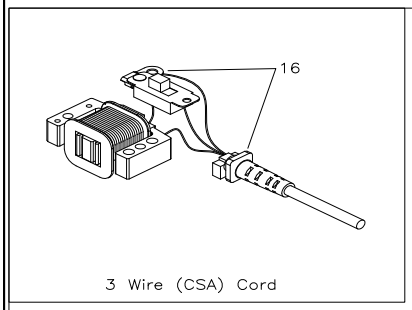

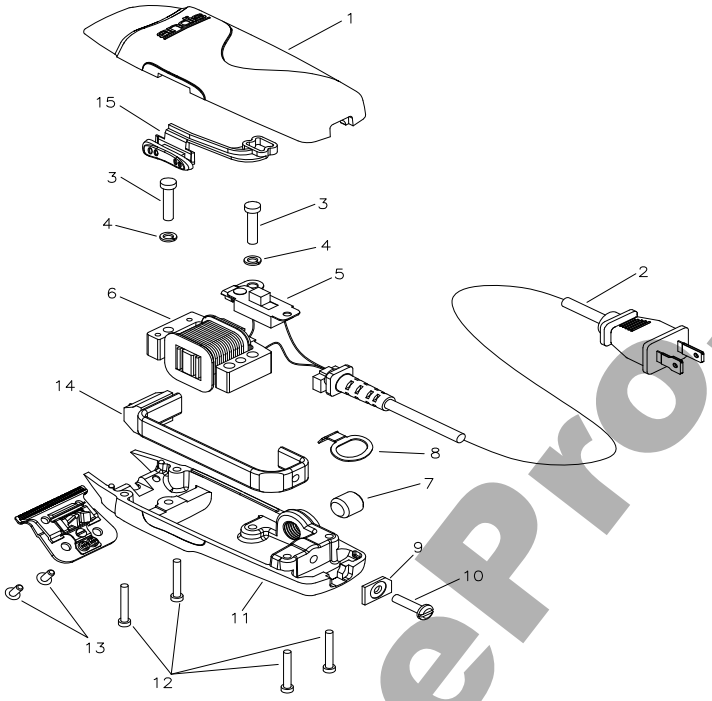

ITEM NO.	PART NO.	DESCRIPTION	QTY. REQ'D
1		Upper Housing	
1a	26702	Upper Housing (Styliner II)	1
1b	26955	Upper Housing (Trend Setter)	1
1c	26161	Upper Housing Styliner II - Redesign	1
2	26049	Cord Set (UL 2-Wire)	1
3	25013	Coil Screw	2
4	01059	Lock Washer	2
5	26505	Switch Assembly (used with 2-wire cord)	1
6	S26504	Field Assembly	1
7	26042	Armature Adjustment Screw	1
8	65842	Hanger Hook	1
9	26949	Washer	1
10	26529	Anchor Screw	1
11		Lower Housing	
11a	26901	Lower Housing - Black (UL Listed)	1
11b	26902	Lower Housing - Black (CSA Listed)	1
11c	26156	Lower Housing - SLII Redesign (UL)	1
11d	26158	Lower Housing - SLII Redesign (CSA)	1
12	26021	Housing Screw	4
13	26899	Blade Screw	2
14	S26733	Armature	1
15		Switch Actuating Arm	
15a	26013	Styliner II	1
15b	55003	Styliner II - Redesign	1
16	26515	Switch Bracket/Cord Set (CSA 3-Wire)	1

ITEM NO.	PART NO.	DESCRIPTION	QTY. REQ'D

IMPORTANT INFORMATION

When ordering repair parts, include part number, part name and model of trimmer. For best performance, trimmer blades should be CLEANED and OILED with Andis Clipper Oil before and after use, If repair is necessary, return to any Andis Authorized Repair Service Station, or to Andis Company, 1800 Renaissance Blvd., Sturtevant, Wisconsin, 53177 U.S.A.. Pack carefully, mail either Insured Parcel Post, or U.P.S. , attach a letter to outside of package explaining difficulty.

www.TheEdgePro.com