andis

MODEL D-7 CLIPPER
120 VOLT

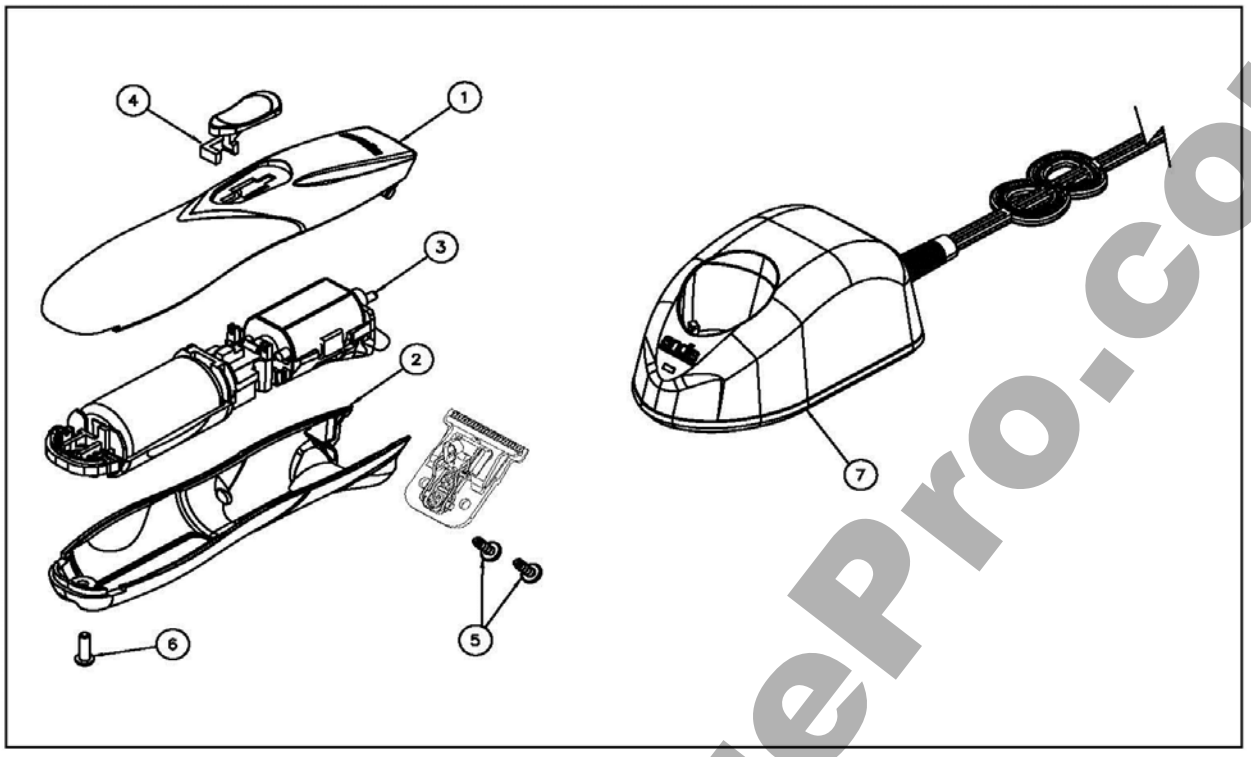

ITEM NO.	PART NO.	DESCRIPTION	QTY. REQ'D
1	77307	Upper Housing	1
2	77308	Lower Housing	1
3	77316	Sled Assembly	1
4	77309	Switch Actuator	1
5	29271	Blade Screw	2
6	32580	Housing Screw	1
7	200069	Charging Stand	1

ITEM NO.	PART NO.	DESCRIPTION	QTY. REQ'D

IMPORTANT INFORMATION

When ordering repair parts, include part number, part name and model of trimmer. For best performance, trimmer blades should be CLEANED and OILED with Andis Clipper Oil before and after use, If repair is necessary, return to any Andis Authorized Repair Service Station, or to Andis Company, 1800 Renaissance Blvd., Sturtevant, Wisconsin, 53177 U.S.A.. Pack carefully, mail either Insured Parcel Post, or U.P.S. , attach a letter to outside of package explaining difficulty.

www.TheEdgePro.com