andis®

MODEL MBG2 CLIPPER
120 VOLT

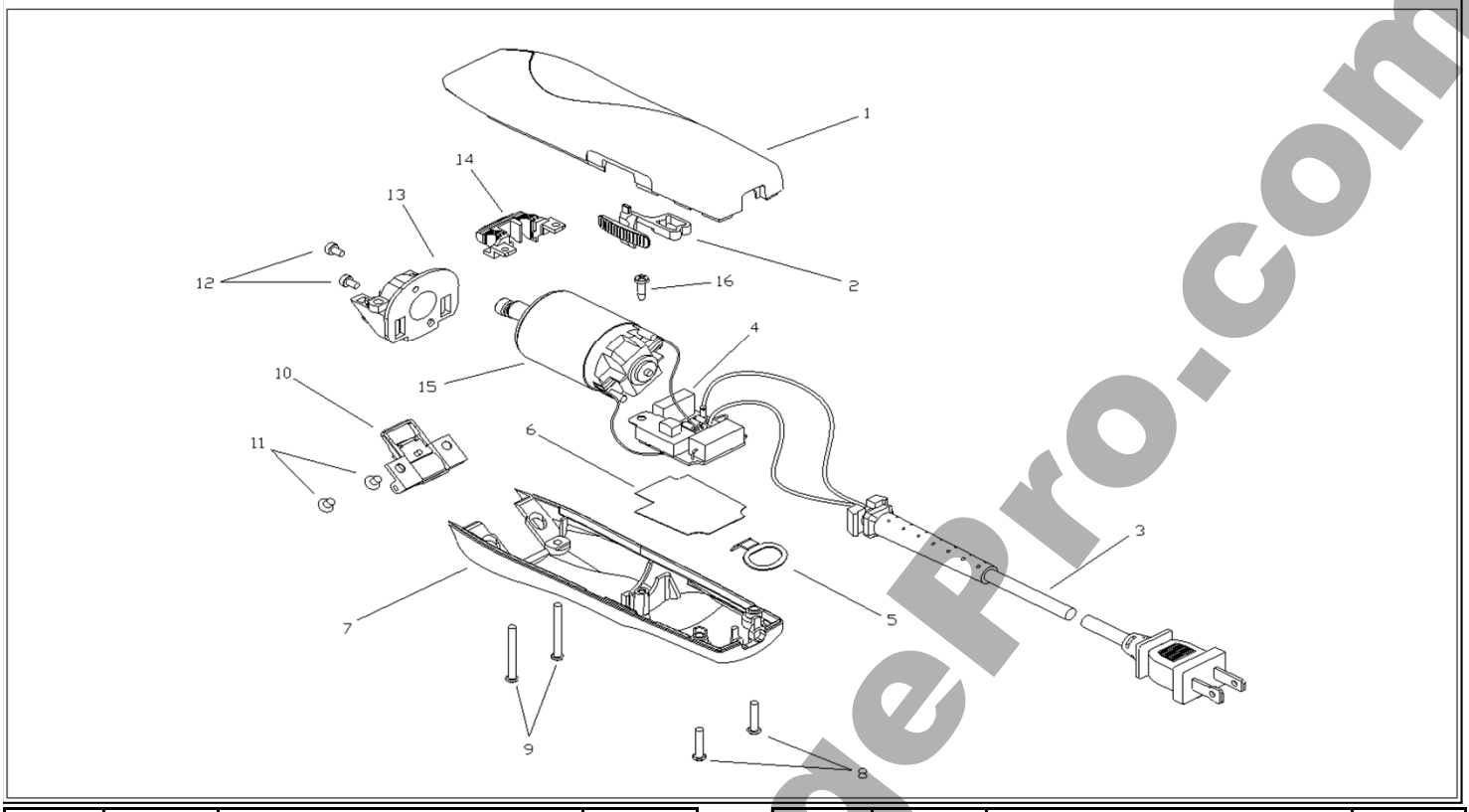

ITEM NO.	PART NO.	DESCRIPTION	QTY. REQ'D
1		Upper Housing	
1a	65294	Metallic Black w/Experience Logo	1
1b	65333	Black w/Andis Logo	1
1c	65362	Metallic Purple w/Andis Logo	1
1d	65573	Metallic Blue w/Pro Pet Logo	1
1e	65574	Metallic Blue w/Ceramic Adv. Logo	1
1f	65576	Metallic Blue w/Andis Logo	1
2	65808	Switch Actuator	1
3	63999	Cord Set (8')	1
4	65059	Speed Control	1
5	65839	Hanger Hook	1
6	65821	Insulator Sheet	1
7		Lower Housing	
7a	65361	Metallic Purple	1
7b	65578	Metallic Blue	1
7c	65901	Black	1
8	65834	Rear Housing Screws	2
9	22274	Front Housing Screws	2
10	28194	Blade Hinge	1
11	27864	Blade Hinge Screw	2
12	21255	Motor/Drive Frame Mounting Screw	2
13	65903	Motor Frame	1
14	S20651	Blade Drive Assembly	1
15	22511	Motor Assembly - Service	1
16	65828	Switch Mounting Screw	1

ITEM NO.	PART NO.	DESCRIPTION	QTY. REQ'D

IMPORTANT INFORMATION

When ordering repair parts, include part number, part name and model of trimmer. For best performance, trimmer blades should be CLEANED and OILED with Andis Clipper Oil before and after use, If repair is necessary, return to any Andis Authorized Repair Service Station, or to Andis Company, 1800 Renaissance Blvd., Sturtevant, Wisconsin, 53177 U.S.A.. Pack carefully, mail either Insured Parcel Post, or U.P.S. , attach a letter to outside of package explaining difficulty.

www.TheEdgePro.com