andis

Xperience–68050

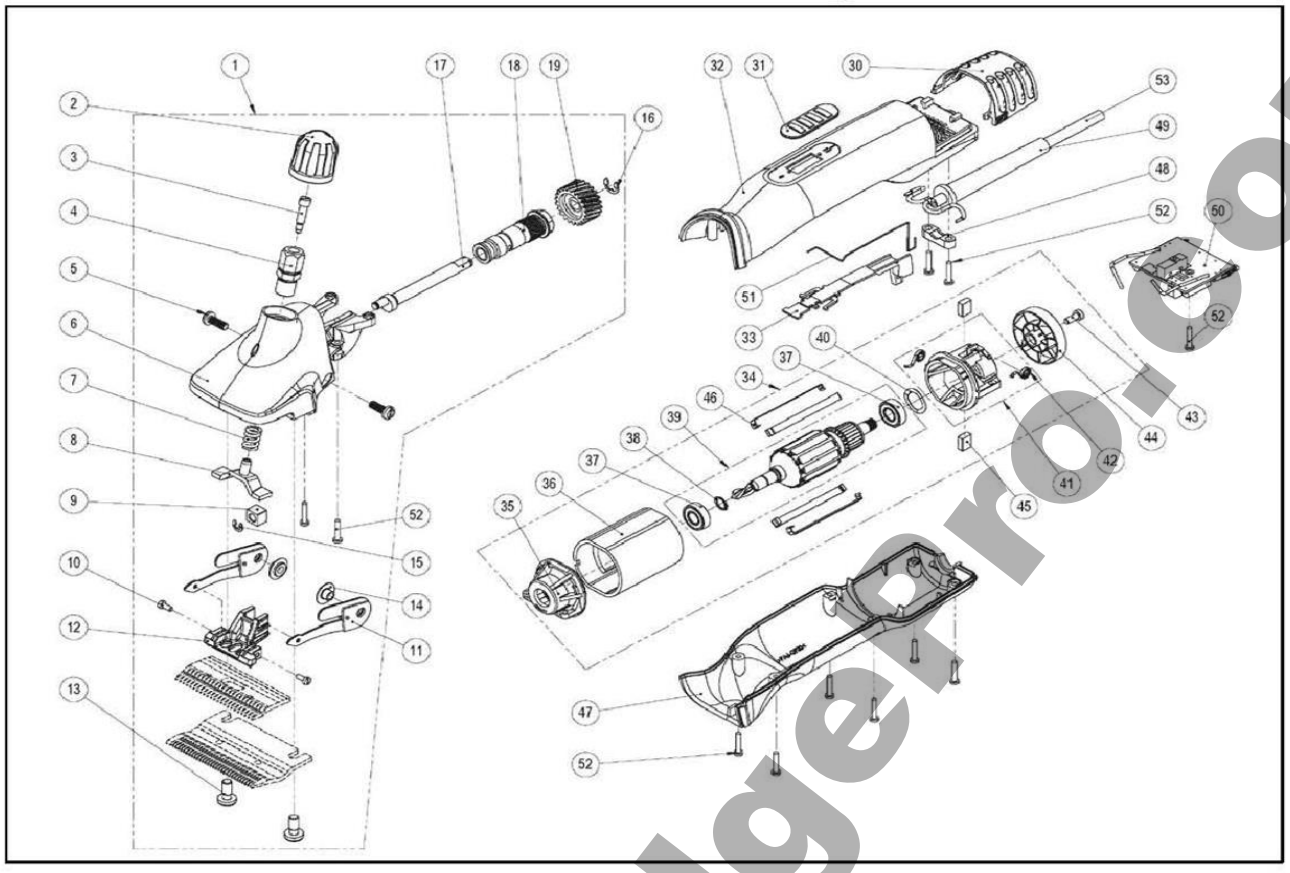

ITEM NO.	PART NO.	DESCRIPTION	QTY. REQ'D
1	708-140	Clipper Head - Cattle W/O Blades	1
3	706-510	Distance Screw	1
4	707-091	Tension Sleeve	1
5	706-520	PH-screw M5x14	2
7	706-517	Pressure Spring	1
8	706-511	Pressure Plate	1
9	706-507	Crank Drive Block	1
10	706-525	Socket head cap Screw Partially threaded M3x6	2
11	706-518	Laminated Spring	2
13	706-521	Comb Screw - Cattle/Horse	2
14	708-146	Centering Bushing	2
15	707-088	Circlip for shaft size 3.73	1
16	706-524	Circlip for shaft size 6	1
19	708-143	Cogwheel Z22 Cattle	1
30	708-070	Air Filter - Black	1
34	708-103	120 V Motor	1
42	708-124	Carbon Bush Spring	2
43	706-523	PH-screw M4x10	1
45	708-118	Carbon Brushes	2
50	708-081	PCB 120 V	1
52	707-557	PT-screw Kombitorx KA30x16	11
53	707-057	Cable with USA plug	1

ITEM NO.	PART NO.	DESCRIPTION	QTY. REQ'D

IMPORTANT INFORMATION

When ordering repair parts, include part number, part name and model of trimmer. For best performance, trimmer blades should be CLEANED and OILED with Andis Clipper Oil before and after use, If repair is necessary, return to any Andis Authorized Repair Service Station, or to Andis Company, 1800 Renaissance Blvd., Sturtevant, Wisconsin, 53177 U.S.A.. Pack carefully, mail either Insured Parcel Post, or U.P.S. , attach a letter to outside of package explaining difficulty.

www.TheEdgePro.com